**GREISINGER electronic GmbH**
Hans-Sachs-Straße 26 ● 93128 Regenstauf ● Germany
Fon +49 (0) 9402 - 9383 - 0 ● Fax -33
www.greisinger.de ● info@greisinger.de



# Temperature Probe with Transmitter GTMU-MP

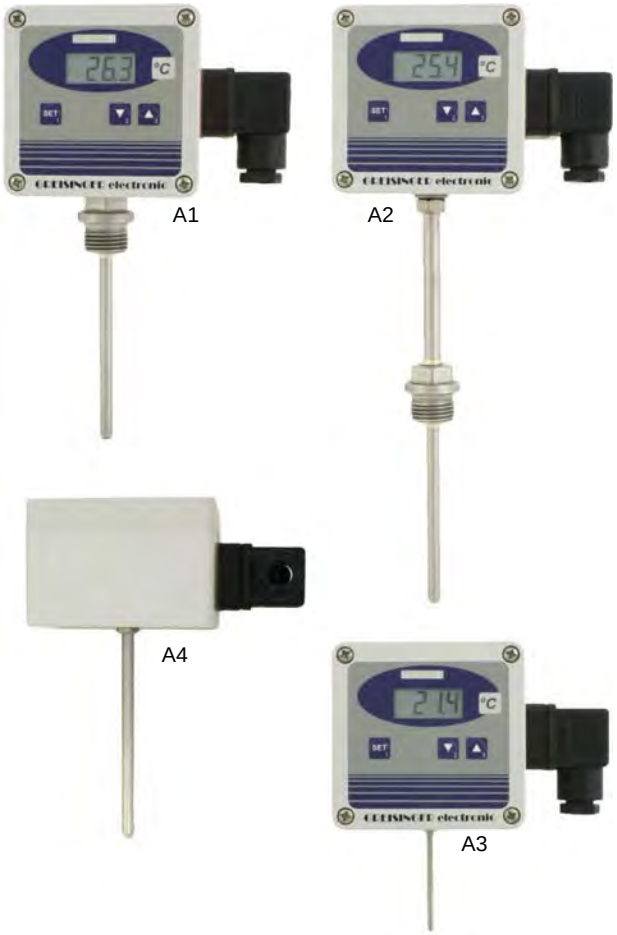


- **Optimal adaptability due to 4 different design types**
- **Freely scalable measuring range**
- **With display by default**

## Characteristics

The GTMU-MP is a temperature probe with integrated transmitter. There are 4 basic design types. This ensures optimal adaptability to different conditions like higher temperatures, outdoor usage or wall mounting.

The measurement is done by means of a resistive temperature sensor (Pt1000, 2- wire). The measuring range is freely scalable via buttons. The transmitter outputs linearized current or voltage signals.

The GMTU-MP has a display by default and is completely customized according to customer requirements.

## Technical data

| | | |
|---|---|---|
| Sensor element | : | Pt1000 (2-wire) |
| Measuring range | : | -50.0..+400.0 °C, freely scalable |
| Accuracy | : | |
| Temperature display | : | ±0.4 % of m.v. ±0.2 °C |
| Output signal | : | ±0.2 % FS |
| Output signal | : | standard 4..20 mA (2-wire)<br>optional 0..1 V, 0..10V (3- / 4- wire) |
| Power supply Uv | : | 12..30 V DC (standard),<br>18..30 V DC at output signal .. V |
| Permissible burden $R_A$ | : | (at 4..20 mA) $R_A = (U_V – 12 V) / 0.02 A$ |
| Permissible load $R_L$ | : | (at … V) $R_L > 3000 \Omega$ |
| Working temperature | : | -25..+70 °C (electronics) |
| Housing material | : | ABS |
| Probe material | : | stainless steel |
| Protection class | : | IP65 |
| Mounting | : | with fastening holes for wall mounting or with tube support made of plastic for duct mounting |
| Electrical connection | : | elbow-type plug (EN 175301-803/A) |
| **Display** | | |
| Display | : | LCD-display |
| Height | : | 10 mm |
| Display range | : | 4 digit |
| **Functions** | : | Min-/max- value memory<br>Zero point / slope digitally adjustable<br>output signal freely scalable |

| | A1 | A2 | A3 | A4 |
|---|---|---|---|---|
| **Process connection** (standard) | G ½ | | — | — |
| **Fitting length** (standard) | EL = 100 mm | EL = 100 mm | EL = 50 mm | EL = 100 mm |
| **Neck tube length** (standard) | — | HL = 100 mm | — | — |
| **Diameter** (standard) | D = 6 mm | D = 6 mm | D = 3 mm | D = 6 mm |

## Design types

| | |
|---|---|
| **A1** | with process connection G ½ for screw-in |
| **A2** | for higher temperatures, process connection G ½ in distance to housing, HL = length of neck tube |
| **A3** | indoor / outdoor probe for wall mounting<br>*(potting of electronics necessary for outdoor application)* |
| **A4** | duct probe with centrally mounted sensor tube pointing downwards |

## Dimensions

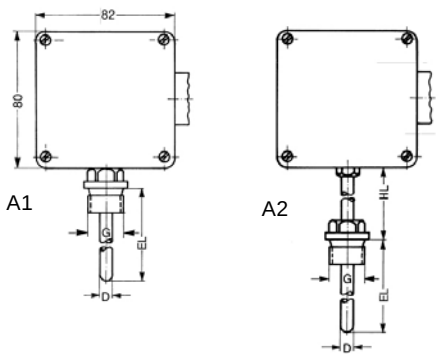


continued on next page

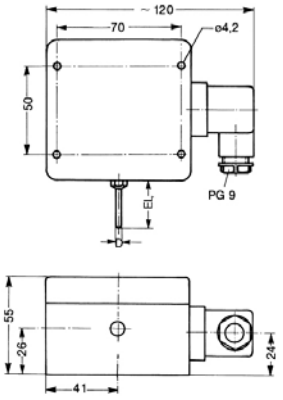


A3

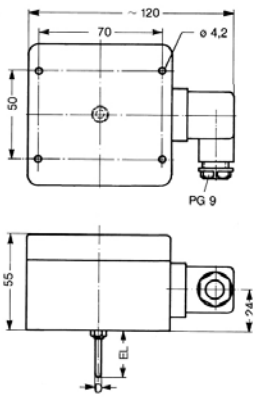


A4

## Ordering code

**GTMU-MP** - 1. [ ] - 2. [ ] - 3. [ ] - 4. [ ] - 5. [ ] - 6. [ ] - 7. [ ]

| | | | |
|---|---|---|---|
| **1.** | **Design type** | | |
| | A1 | as per description | |
| | A2 | as per description | |
| | A3 | as per description | |
| | A4 | as per description | |
| **2.** | **Output signal** | | |
| | A1 | 4..20 mA (2-wire) (standard) | |
| | V1 | 0..1 V (3-/ 4-wire) | |
| | V2 | 0..10 V (3-/ 4-wire) | |
| **3.** | **Fitting length EL** | | |
| | 050 | 50 mm (standard A3) | |
| | 100 | 100 mm (standard A1, A2, A3) | |
| | xxx | any EL in mm (e.g.: 200 = 200 mm) | |
| **4.** | **Probe diameter D** | | |
| | D03 | Ø 3 mm (standard A3) | |
| | D04 | Ø 4 mm | |
| | D05 | Ø 5 mm | |
| | D06 | Ø 6 mm (standard A1, A2 and A4) | |
| | D08 | Ø 8 mm | |
| **5.** | **Thread (only at design type A1 and A2)** | | |
| | G1 | G ½, V4A (standard) | |
| | G2 | G ¼,V4A | |
| | G3 | G ¾,V4A | |
| | G5 | G ⅜, V4A | |
| | M5 | M5, V4A | *only D = 3 mm possible* |
| | M6 | M6, V4A | *only D = 3 mm possible* |
| | M8 | M8, V4A | *max. D = 5mm possible* |
| | M0 | M10, V4A | *max. D = 6mm possible* |
| | M2 | M12, V4A | |
| **6.** | **Length of neck tube HL (only at design type A2)** | | |
| | 100 | 100 mm (standard) | |
| | xxx | any HL in mm (e.g.: 500 = 500 mm) | |
| **7.** | **Options** (combination of multiple options upon request) | | |
| | 000 | without Option | |
| | LACK | board varnished on both sides (for outdoor usage) | |
| | DSG | Double sensor accuracy | |